Locking Security Cages

SAP# 100603686-/!.lb9¢{9/{¢hw!D9{¢99[5hhw{9b5/!tw{

SAP# 100603168--{9/{¢hw!D9/!.{¢99[5hhw599tw{

Walmart Part No.	MULTIPLE
Walmart Description	SECURITY STORAGE CABINETS

NOTE! DIMS ARE NOMINAL

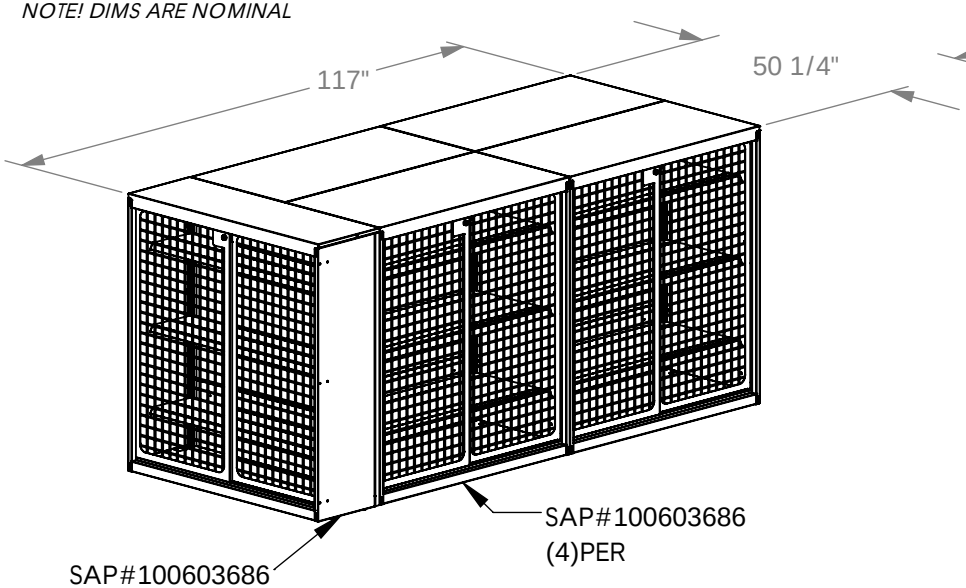

LOCKINGCAB_10

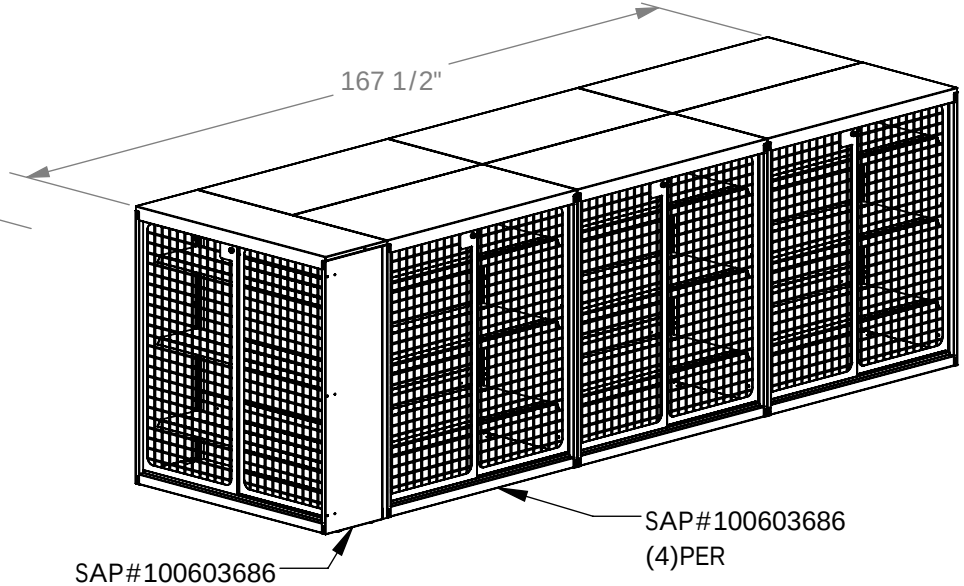

LOCKINGCAB_14

Visit www.ladarling.com/resources for a PDF copy of the instruction sheets.

LA DARLING
REDEFINE. RETHINK. RETAIL SOLUTIONS.

LAD DESCRIPTION			
LOCKING SECURITY CABINET INSTRUCTIONS			
LAD PART NO.	REV.	BY	DATE
301162IS	1	CJS	1/12/17

Customer Service 1-800-682-5730

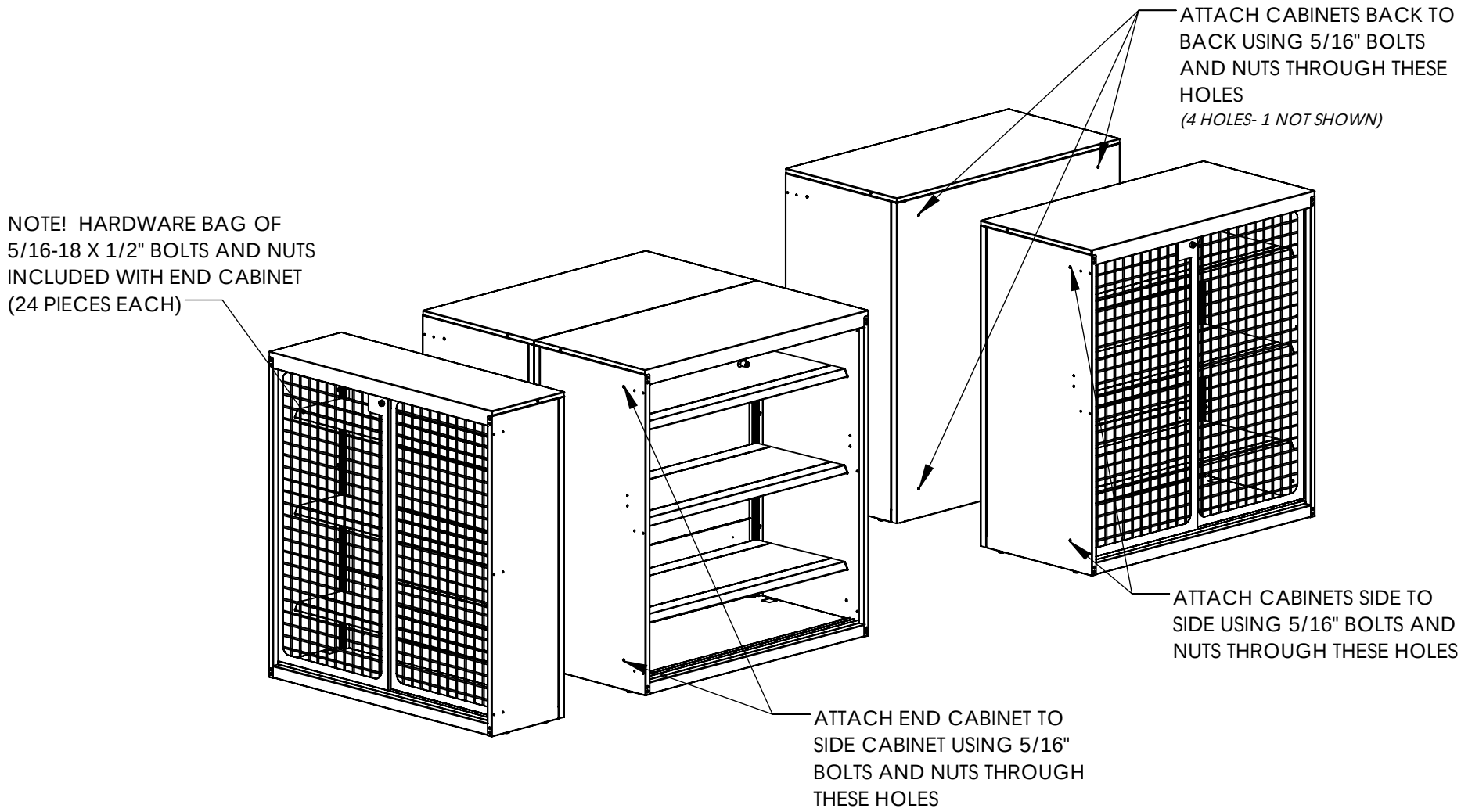

LA DARLING
REDEFINE. RETHINK. RETAIL SOLUTIONS.

LAD DESCRIPTION				
LOCKING SECURITY CABINET INSTRUCTIONS				
LAD PART NO.	REV.	BY	DATE	
301162IS	1	CJS	01/12/17	

Customer Service 1-800-682-5730